GamePlan, inc.

GAME PLAN, INC.
1515 W. Fullerton Avenue
Addison, Illinois 60101
Telephone (312) 628-8200
TLX 20-6098

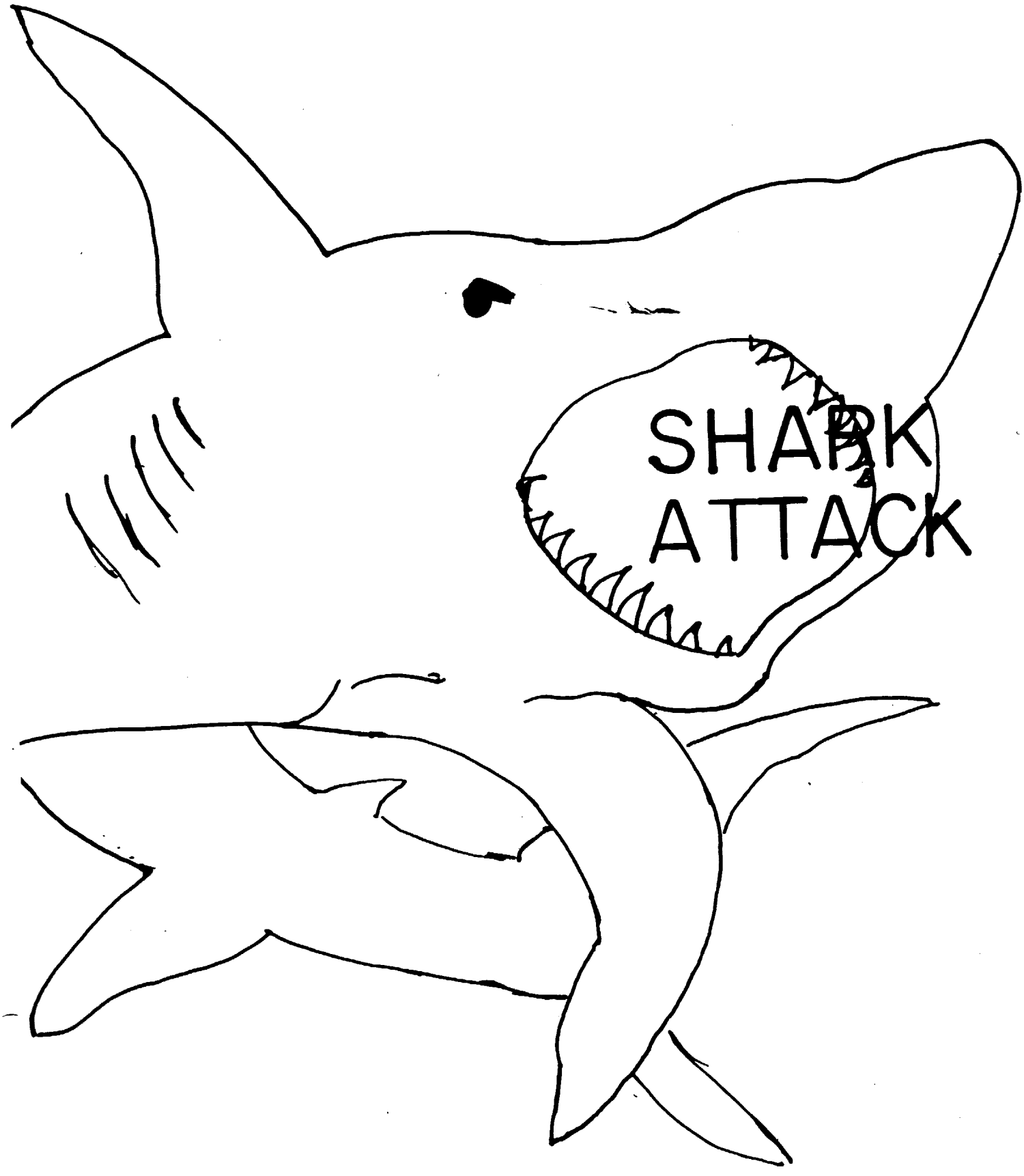

1.0 INTRODUCTION

Shark Attack is a full color one or two player action game that offers unique features to capture and prolong player interest. Controls for movement (Joystick & Thrust and Munch) allow the player to steer his Shark around the screen and devour divers. The video and audio systems work together to make Shark Attack an exciting, special game.

1.1 UNPACKING INSPECTION

To ensure the equipment incurred no damage in shipment, inspect the container prior to acceptance from the carrier. If no immediate cabinet damage is evident, perform the following visual inspection:

1. Open the side of the game with the appropriate packaged key.
2. Examine each major and electrical component thoroughly for scrapes, broken or missing parts and loose or missing screws.
3. Check for loose cable connectors.
4. Visually verify that all the intergrated circuit devices (IC's) plugged into sockets are properly seated and that no IC pins are bent or misaligned.
5. Repeat steps above 2 & 3 after opening top with appropriate key.

If you find any damage during this inspection, file a claim with the freight carrier, and send a complete report of the damage to Game Plan Inc.

1.2 INSTALLATION

Planning the location of the game should involve both physical and electrical consideration. Physical consideration concern the placement of the equipment with respect to clearances, AC cable and enviromental conditions such as ventilation, temperature, weight support and accessibility (although your game has the durability to endure nearly every type of physical hazard). Electrical considerations include availability of the correct voltage and frequency.

In planning this installation, consideration must also be given to working space required for personnel involved with operation or maintenance of this system.

NOTE: The cabinet must be within six feet fo an AC outlet. Be certain that a ground jack or terminal is available at the outlet.

CAUTION: DO NOT remove the AC ground prong from the plug.

A. Install 4 provided levelers to legs .

B. Insert legs into bottom of cabinet and fasten with eight (8) acorn head bolts supplied,level cabinet.

C. A.C. only 115 volt 60 cycle.

CAUTION:

1. Do not install this game in places directly exposed to sunlight or excessive

CAUTION cont.

heat, to prevent rising internal temperatures.

2. High voltage runs the monitor. Therefore only persons familiar with safety measures should make any adjustments.
3. As with any solid state games the power should be turned off before replacing any parts or disconnecting any plugs.
4. Always take boards to distributor for repair, do not attempt to make any repairs with volt-ohmmeter or other test equipment as the internal voltage of such equipment may damage the circuitry.

1.3 PRELIMINARY CHECKOUT PROCEDURE

After properly installing Shark Attack we suggest checking it's operation in the following procedure:

1. Plug the AC jack into the AC outlet.
2. Allow one to two minutes for CRT to warm up.
3. Observe the TV monitor display to assure the correct attract mode is present on the screen.
4. If the Shark Attack display is incorrect, correct immediately.
5. Insert a quarter into the coin slot.
6. Continue to play the game and verify that all screen images are displayed, once again, discribed in the Normal Operation procedure.

If repairs are necessary, contact your distributor or Game Plan Inc.

2.0 GAME DESCRIPTION

The following paragraphs describe the video images and sound effects for SHARK ATTACK.

2.1 ATTRACT MODE

After power-up, SHARK ATTACK automatically cycles thru 3 video images that constitute the attract mode.

2.1.1 MESSAGE DISPLAY

The following message appears:

DO YOU HAVE THE NERVE
FOR.....

SHARK ATTACK

2.1.2 HIGH SCORE

Upon power-up when the high scores appear, there will be displayed a column of scores along with initials. All the scores will be 5000 pts. The first player to exceed 5000 pts. will be permitted to enter his initials (3) next to his score, using the joystick and munch button. Only the highest score will be entered, even if both players should beat the score. Only beating the top score will allow the player to enter his initials at the top of the column even though according to the scores displayed a player may have had the 2nd or 3rd best scores. The message displayed during this period informs the player how to accomplish this along with a display that he has 60 seconds to do this. The number 60 immediately begins counting down to 0 seconds. Should the player not do anything during the 60 seconds the score (his) will be displayed with no initials.

2.1.3 SIMULATED GAME DISPLAY

This shows the Shark swimming around the screen, while a squadron of divers (4) are also swimming and shooting spears. Should the shark catch a diver, the diver is devoured. Should one of the spears hit the shark, the shark dies and this part of the attract mode ends, just as the round would if it were during game play.

2.2 COIN INPUT MODE

At all times, while power is on, reguardless of the game conditions or the operator options, the computer will accept a coin input, generate a unique sound and increment the coin counter. Should a game not be in progress, upon satisfying the first level (either 1 or 2 coins) The screen will read:
PRESS 1 PLAYER OR INSERT MORE COINS if the second level is reached or matched the screen will read: PRESS 1 OR 2 PLAYER BUTTON.

NOTE: the only operator options available are 1 PLAY 1 COIN
1 PLAY 2 COINS

2.3 GAME-START MODE

The computer scans the game-start switches only during the attact and game-over modes and only then if the credit-count is non-zero. When a start-switch is activated, the computer compares the operator selected credit option (1 or 2 credits per play) against the credit-count and ignores the switch if enough credits are not available. If there are sufficient credits, the computer subtracts the price of the selected game, and resets the player scores to zero.

2.4 SINGLE PLAYER GAME

PLAYER (1) GET READY

The actual game-play sequence in Shark Attack consists of 3,4,or 5 turns (operator selectable) each of which lasts as long as the player can skillfully maneuver his shark to avoid divers spears. When he loses a shark the screen displays his score the total number of sharks left and PLAYER (1) GET READY.

Assuming a four (4) shark game play begins with player-scores 0000 and four (4) sharks immediately below the score,four (4) divers appear and immediately begin firing spears and swimming in a random pattern in an attemp to hit and destroy the shark. (While the cassette player begins playing diver chatter). The player uses his joystick-control to move the shark to an attacking position and using the munch button to activate the sharks jaws (player must continually depress and release to keep the jaws moving)and devour the divers. Each time a diver is devoured his score is increased. Each time the last diver of a squad is devoured the player is awarded a skull (whose eyes blink left and right) in the same color as the divers just eaten after every seven(7) squadrons of divers have been eaten the screen displays Bonus Shark (extra round and adds one (1) shark below the players score. When a shark is hit by a spear it breaks up (in place) the message PLAYER (1) GET READY appears along with the players score and the total number of sharks left in the game. When the round ends, the next round begins with the same number of divers left from the previous round remembering that the game always starts with four (4) divers.

2.5 TWO-PLAYER GAME

The game-play of Shark Attack in a two-player game is identical to single-play with the players alternating turns. On the upright version, the players use one common set of controls, on the cocktail version there are two-(2) sets of controls on opposite sides of the table. The computer activates control alternately between player 1 and 2 and flip-flops the screen image so that it is oriented to the player in control.

2.6 SCORING

Scoring in SHARK ATTACK is as follows:

SQUAD #	# OF DIVERS	@	POINTS	TOTAL PTS.	BONUS SKULL	POINTS	TOTAL PTS
#1	4	@ 50	= 200	200	1st.	200	400
#2	4	@ 100	= 400	800	2nd.	300	1100
#3	4	@ 200	= 800	1900	3rd.	400	2300
#4	4	@ 300	= 1200	3500	4th.	500	4000
#5	4	@ 400	= 1600	5600	5th.	800	6400
#6	4	@ 500	= 2000	8400	6th.	1000	9400
#7	4	@ 750	= 3000	12,400	7th.	2000	14,400

Every 14,400 pts a Bonus Shark is awarded, after the seventh (7th) Squad the scoring reverts back to Squad 1 (50 pts) and continues from there with the exception that the entire play of the game is greatly speeded up to present a real challenge to the advanced player.

2.7 SOUND EFFECTS

SHARK ATTACK uses a pre-recorded cassette(requiring 2 speakers) and 2 programable sound generators (requiring 2 speakers).

The cassette unit is an automotive type stereo unit which contains the cassette. The interface board takes care of all the requirements turning it on and off and the "cueins" of the individual tracks. The game incorporates four(4) channels of sound and the volume may have to be adjusted for a particular location. To set up the sounds, start the game in the two(2) player mode and adjust channels A,B, and C. To adjust channel D someone must play the game while the divers scream sound is being adjusted.

TO ADJUST

CHANNEL A- (PSG) Heartbeat sound adjust trimmer pot on interface board (smaller board) at location 7D.

CHANNEL B- (PSG) Background sound (Dum, Dum, Dum--dum) adjust trimmer pot on interface board (small board)at location 7C.

CHANNEL C- Diver chatter-This sound comes from the cassette player. Using the volume control on the cassette player itself To make channel C louder than D move BALANCE control until the desired sound level is obtained.

CHANNEL D- Divers screams-This sound also comes from the cassette player control the master volume for channel C & D by increasing the volume control on the unit. To make channel D louder than C move the BALANCE control until the desired sound level is obtained.

NOTE: The balance between channel C & D has been preset. All you need to adjust is the master volume control. Should the screams want to be eliminated move the balance control to the extreme position where only the divers chatter will come out.

3.0 OPERATOR OPTIONS

The standard options for Shark Attack are:

3.1 COINS PER PLAY

Dip Switch located at 5B on the interface board (small board)

OFF- ONE (1) Coin per player

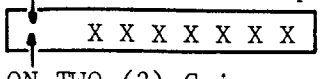

ON-TWO (2) Coins per player

3.2 NUMBER OF SHARKS PER GAME

Dip Switch located at 6B on the interface board (small board)

3 SHARKS per player switch setting:

4 SHARKS per player switch setting:

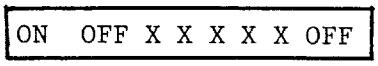

5 SHARKS per player switch setting:

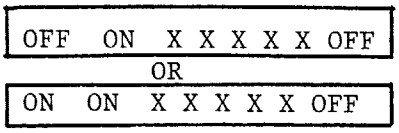

3.3 SELF DIAGNOSTICS

To put the game into self-test set the dip switch located at 6B on the interface board (small board)

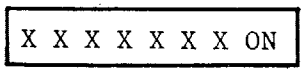

NOTE: return the switch to the off position after you have checked the EP ROMS so that normal play can be resumed.

4.0 PLAYER INTERFACE

The player has the following controls:

JOYSTICK -8 position-when moved in any of eight (8)directions, will cause the shark to follow in that direction. The directions that the shark moves are UP, DOWN, LEFT, RIGHT, and all DIAGONALS.

The Joystick contain four (4) open contact switches which are closed by the player moving the control. (for switch adjustment see opposite page).

MUNCH-this switch controls the SHARKS JAWS the player must continually depress and release this switchto keep the jaws of the shark moving in order to devour divers.

THRUST-this switch controls the sharks movement. When this switch is depressed the sharks movement (UP, DOWN,LEFT, RIGHT and DIAGONAL) will occur more rapidly, in short the player can move the shark around the screen faster.

5.0 SELF DIAGNOSTICS

Shark Attack has a ROM self-test routine, programmed in. This routine checks the contents of each of the EPROMS inserted in the computer board (larger board) and displays a unique number (checksum) which verifies its correct operation.

To activate the test, place the switch located at-6B in the ON position.

SWITCHE SETTING	
X X X X X X X ON	ROM test setting

On the screen you will find on the first line the date of the creation of this version as well the (REV)ision number. Use these numbers when communications with the factory about any questions. The next line lists the creator of the game. Following this you will see two columns of numbers as follows:

VERSION 01/12/81		
COCKTAIL VERSION		UPRIGHT VERSION
0	19119	Same
1	63477	63228
2	08523	Same
3	29613	Same
4	08663	Same
5	04175	Same
6	26629	26373
7	34860	Same
8	64794	Same
9	13205	Same
10	29922	Same
11	14872	Same
12	24400	Same
13	N/U	N/U
14	N/U	N/U
15	N/U	N/U

If any of these numbers is different, you have a defective ROM in the location listed in the first column.

IMPORTANT NOTE: these numbers will change from revision to revision, check for any inserts or correction to this list shipped with the game.

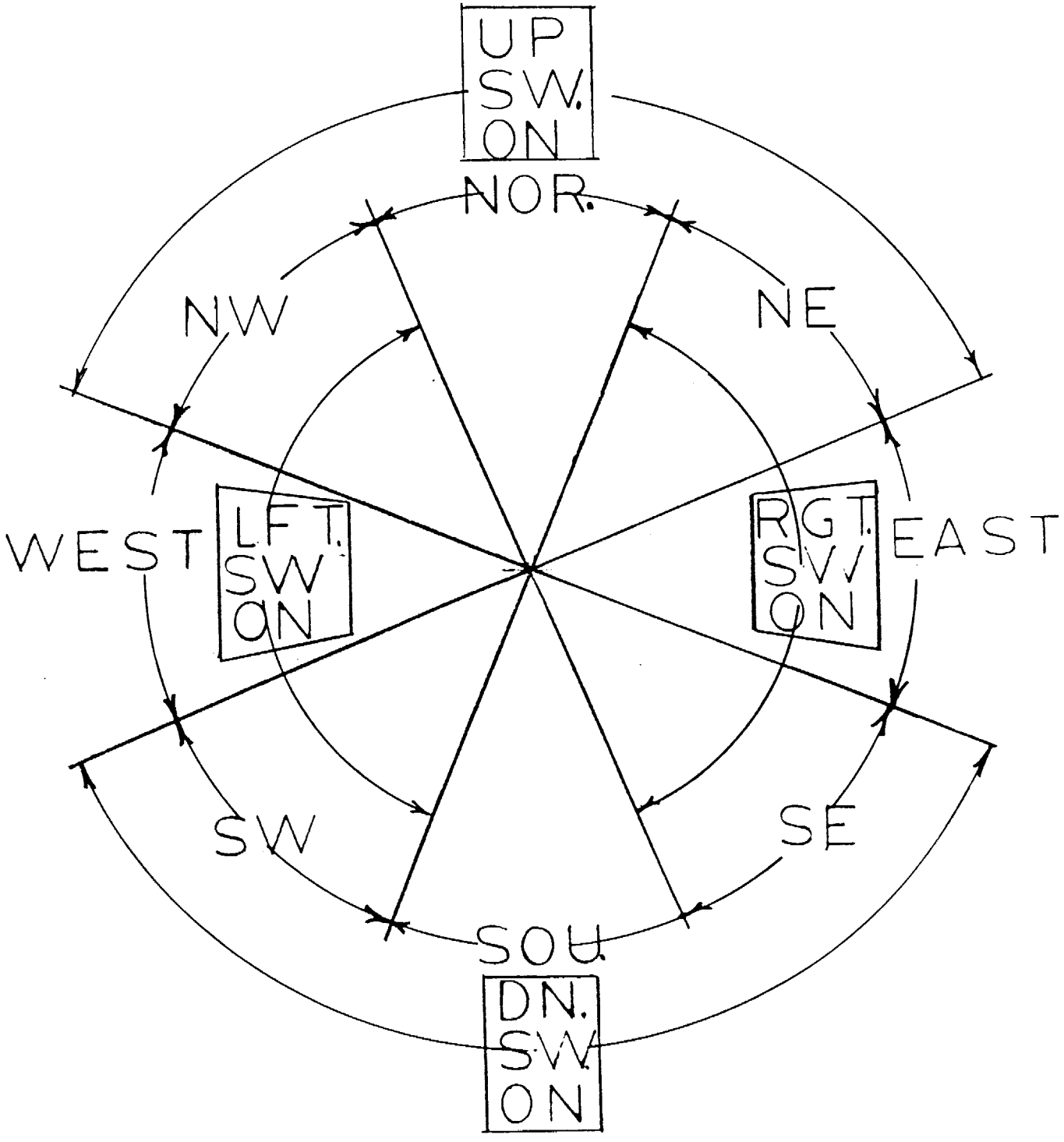

JOYSTICK SWITCH ADJ.

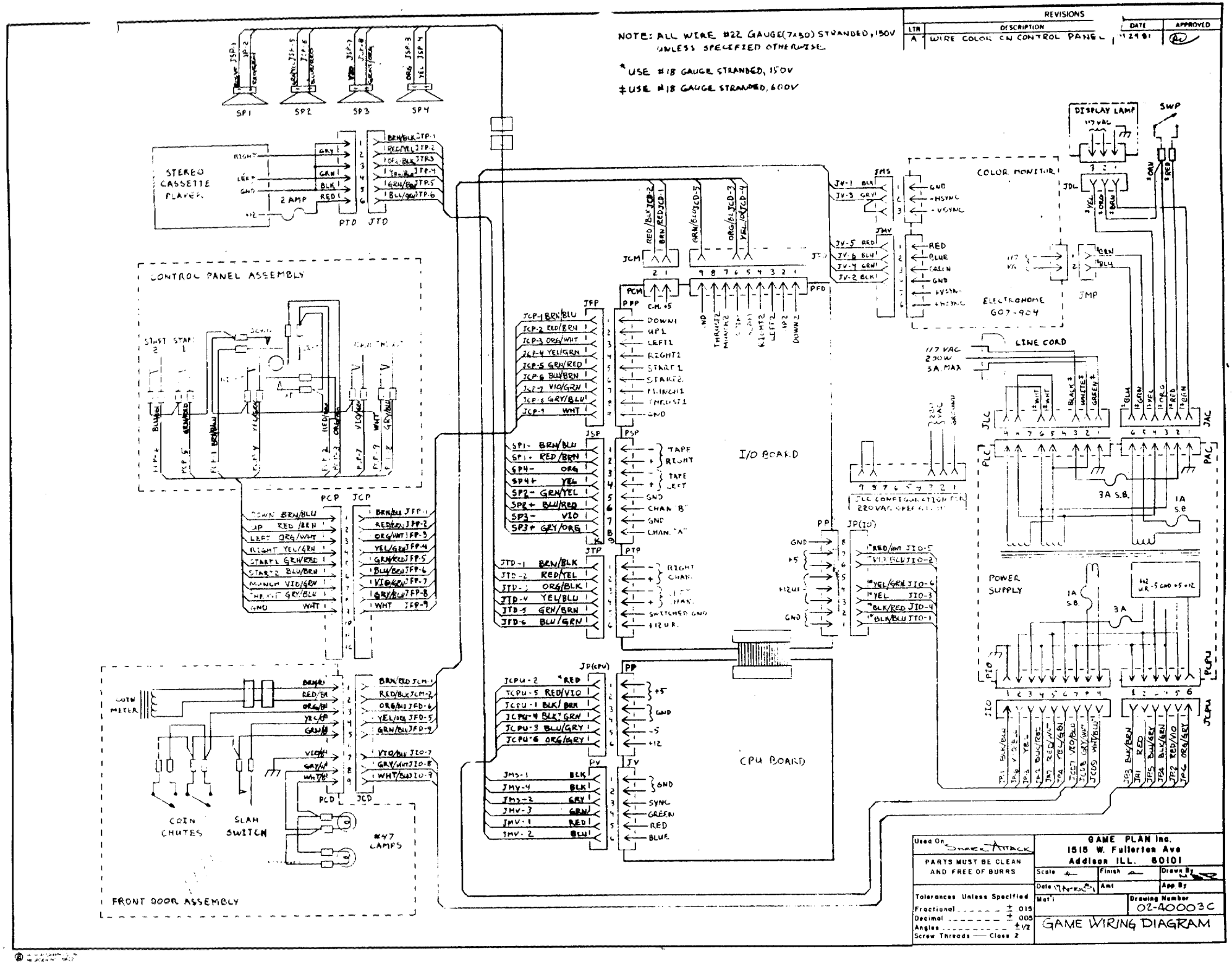
REVISIONS
LTR
DESCRIPTION
DATE
APPROVED
A
WIRE COLOR ON CONTROL PANEL
NOTE: ALL WIRE #22 GAUGE(7x30) STRANDED, 150V UNLESS SPECIFIED OTHERWISE
*USE #18 GAUGE STRANDED, 150V
‡USE #18 GAUGE STRANDED, 600V
SP1
SP2
SP3
SP4
STEREO CASSETTE PLAYER
2 AMP
PTD
JTD
CONTROL PANEL ASSEMBLY
PCP
JCP
COIN METER
COIN CHUTES
SLAM SWITCH
#47 LAMPS
FRONT DOOR ASSEMBLY
PCD
JCD
I/O BOARD
CPU BOARD
JCM
PCM
PFD
JMS
JMV
JDL
JMP
COLOR MONITOR
ELECTROHOME 607-904
DISPLAY LAMP
SWP
LINE CORD
117 VAC 200W 3A MAX
JLC
JAC
PLC
PAC
POWER SUPPLY
3A S.B.
1A S.B.
3A
JIO
JCPU
PCPU
JP(IO)
JP(CPU)
PP
PV
JV
Used On SHARK ATTACK
PARTS MUST BE CLEAN AND FREE OF BURRS
Tolerances Unless Specified
Fractional ± .015
Decimal ± .005
Angles ± 1/2
Screw Threads — Class 2
GAME PLAN Inc.
1515 W. Fullerton Ave
Addison ILL. 60101
Scale
Finish
Drawn By
Date
Amt
App By
Mat'l
Drawing Number
02-40003C
GAME WIRING DIAGRAM

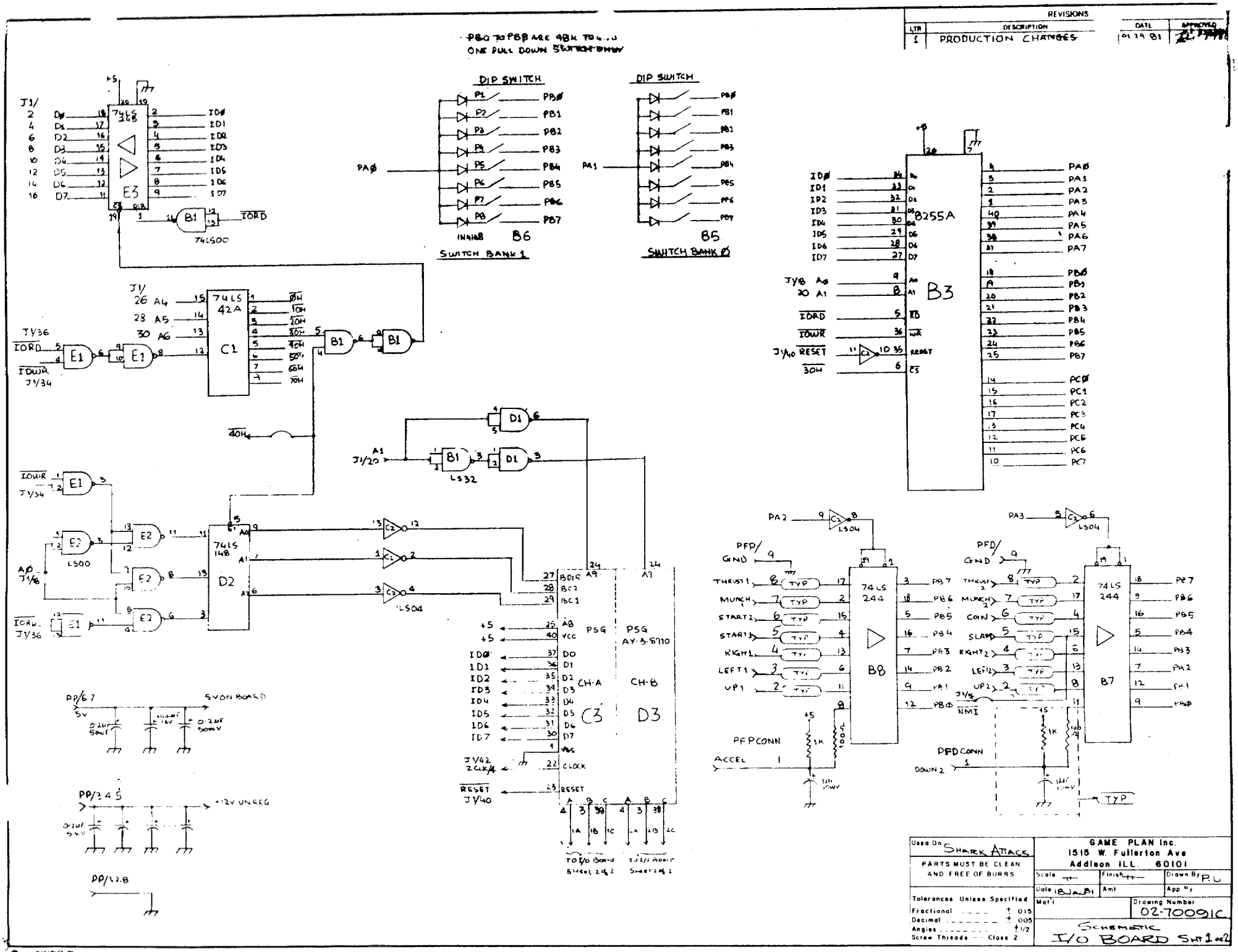
REVISIONS
LTR
DESCRIPTION
DATE
APPROVED
1
PRODUCTION CHANGES
01 29 81
PB0 TO PB8 ARE 48K TO ...
ONE PULL DOWN SWITCH ONLY
DIP SWITCH
SWITCH BANK 1
SWITCH BANK Ø
B6
B5
74LS 245
E3
74LS00
74LS 42A
C1
74LS 148
D2
LS00
LS04
LS32
8255A
B3
74LS 244
B8
B7
PSG
AY-3-8710
CH-A
CH-B
C3
D3
PFP CONN
PFD CONN
ACCEL
DOWN 2
5V ON BOARD
+12V UNREG
TO I/O Board Sheet 2 of 2
Used On SHARK ATTACK
PARTS MUST BE CLEAN AND FREE OF BURRS
Tolerances Unless Specified
Fractional ± .015
Decimal ± .005
Angles ± 1/2
Screw Threads — Class 2
GAME PLAN Inc.
1515 W. Fullerton Ave
Addison ILL. 60101
Scale
Finish
Drawn By P.L
Date 18 Jan 81
Amt
App'y
Mat'l
Drawing Number 02-70091C
SCHEMATIC
I/O BOARD SHT 1 of 2

REVISIONS			
LTR	DESCRIPTION	DATE	APPROVED
1	PRODUCTION CHANGES	01 SEP 81	03/02/81

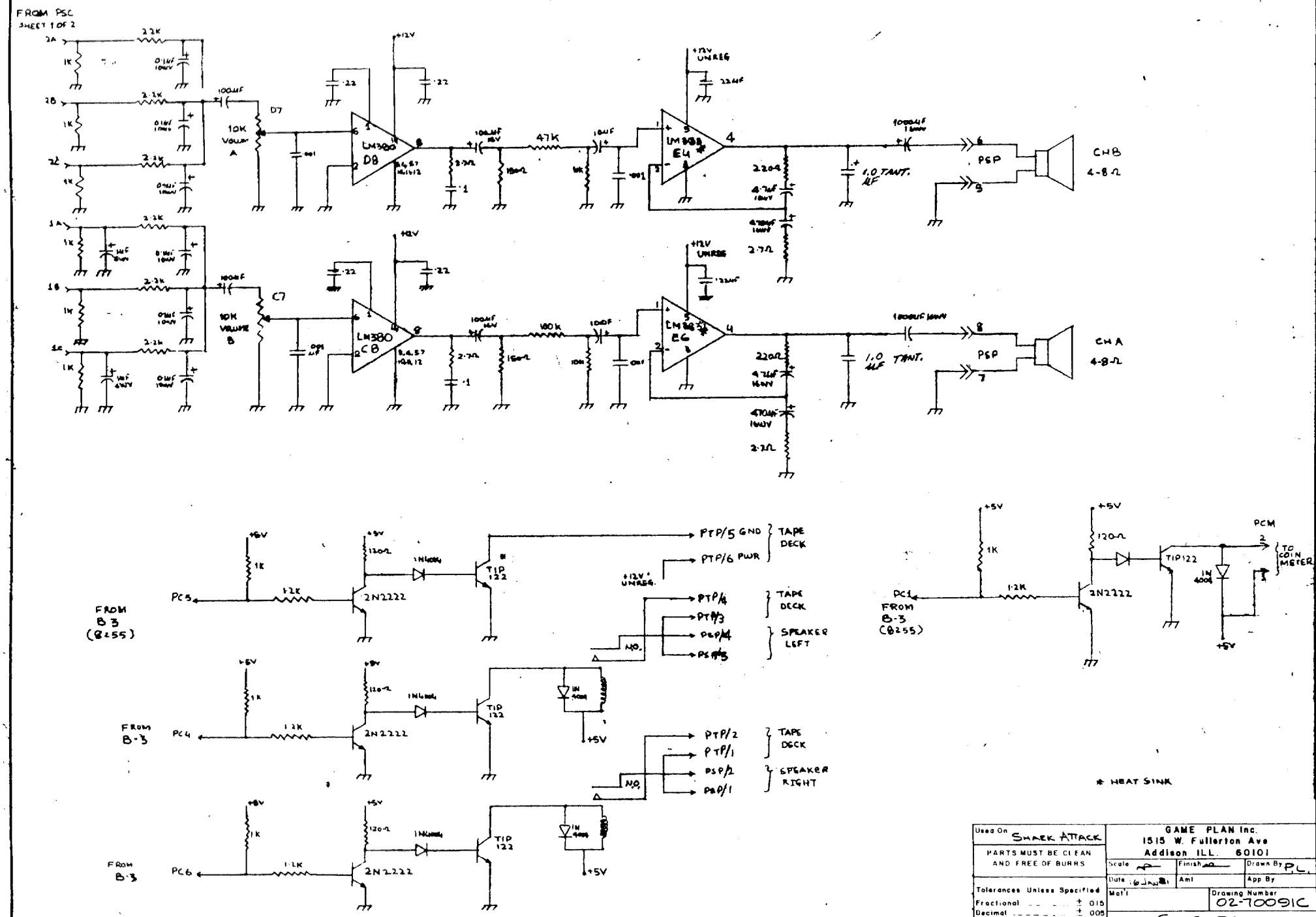

Used On SHARK ATTACK	GAME PLAN Inc. 1515 W. Fullerton Ave Addison ILL. 60101	
PARTS MUST BE CLEAN AND FREE OF BURRS	Scale	Finish / Drawn By PL
Tolerances Unless Specified: Fractional ± .015; Decimal ± .005; Angles ± 1/2; Screw Threads — Class 2	Date 16 JAN 81 / Mat'l	App By / Drawing Number 02-700910
	SCHEMATIC I/O BOARD	SHT 2 of 2

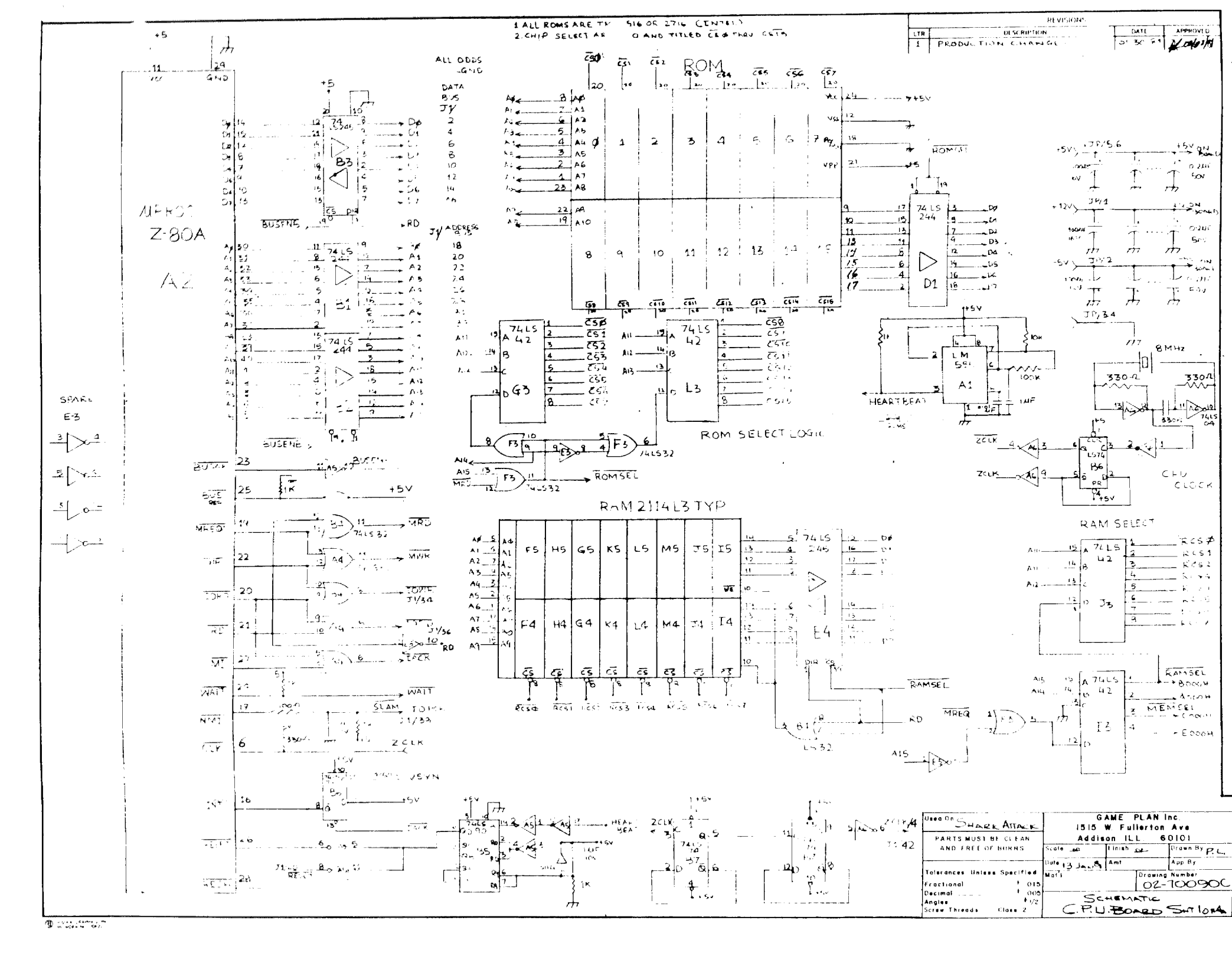

1 ALL ROMS ARE TM 516 OR 2716 (INTEL)
2. CHIP SELECT AR 0 AND TITLED CS0 THRU CS15
REVISIONS
LTR
DESCRIPTION
DATE
APPROVED
1
PRODUCTION CHANGE
MICRO Z-80A
A2
ALL ODDS GND
DATA BUS
ADDRESS BUS
ROM
ROM SELECT LOGIC
RAM 2114 L3 TYP
RAM SELECT
CPU CLOCK
HEARTBEAT
8MHz
SPARE E-3
Used On SHARK ATTACK
PARTS MUST BE CLEAN AND FREE OF BURRS
Tolerances Unless Specified
Fractional ± .015
Decimal ± .005
Angles ± 1/2
Screw Threads Class 2
GAME PLAN Inc.
1515 W. Fullerton Ave
Addison ILL. 60101
Scale
Finish
Drawn By P.L.
Date 13 Jan 8
Amt
App By
Mat'l
Drawing Number 02-700900
SCHEMATIC
C.P.U. BOARD SHT 1 OF 4

REVISION			
LTR	DESCRIPTION	DATE	APPROVED
1	PRODUCTION CHANGES	01 30 81	

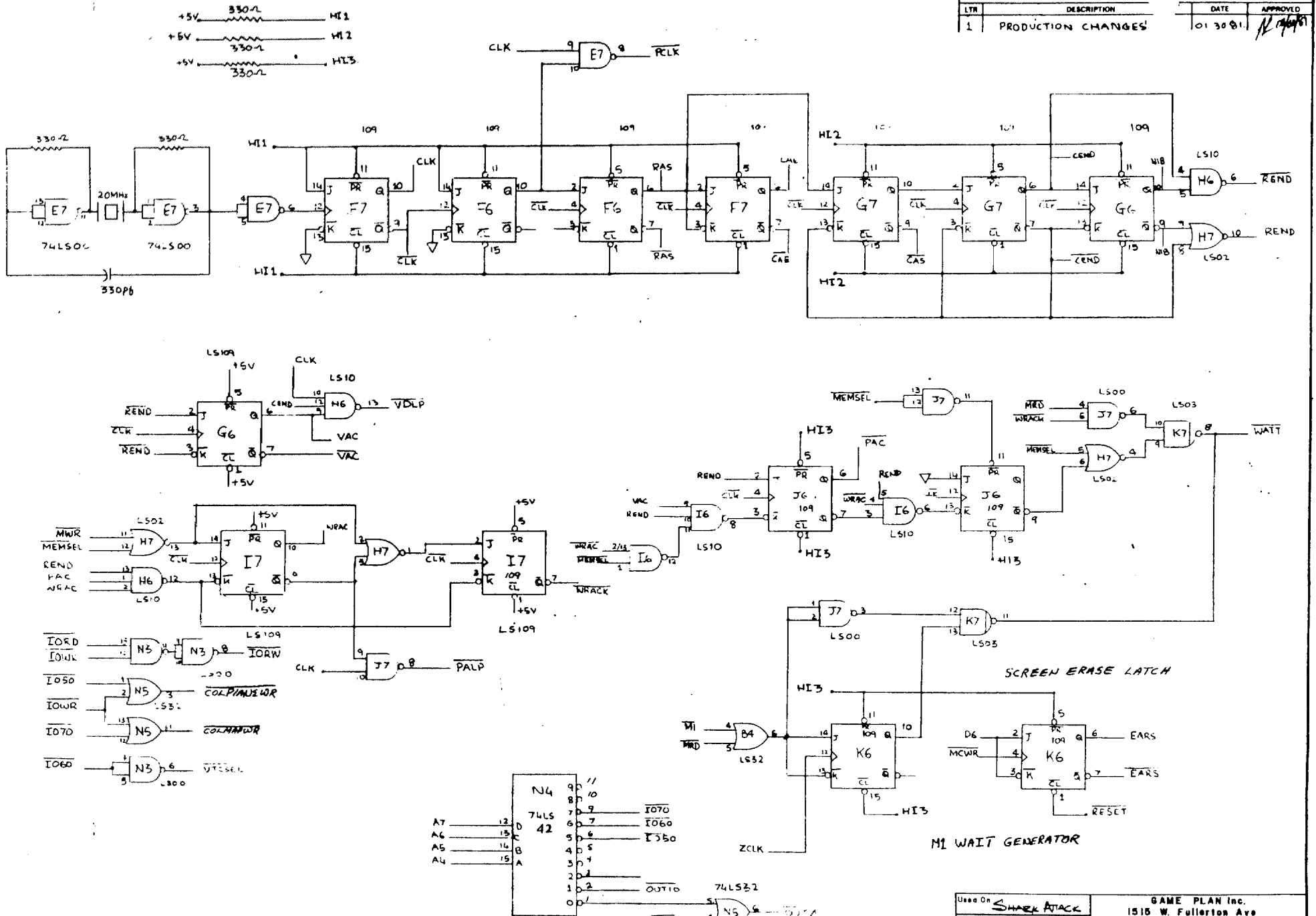

Used On SHARK ATTACK	GAME PLAN Inc. 1515 W. Fullerton Ave Addison ILL. 60101	
PARTS MUST BE CLEAN AND FREE OF BURRS	Scale — Finish — Drawn By R.L	
	Date 12 Jan 81 Amt App By	
Tolerances Unless Specified Fractional ± 015 Decimal ± 005 Angles ± 1/2 Screw Threads Class 2	Mat'l	Drawing Number 02-70090C
	SCHEMATIC C.P.U. BOARD-SHT 2 OF 4	

REVISIONS			
LTR	DESCRIPTION	DATE	APPROVED
1	PRODUCTION CHANGES	01 30 81	[illegible]

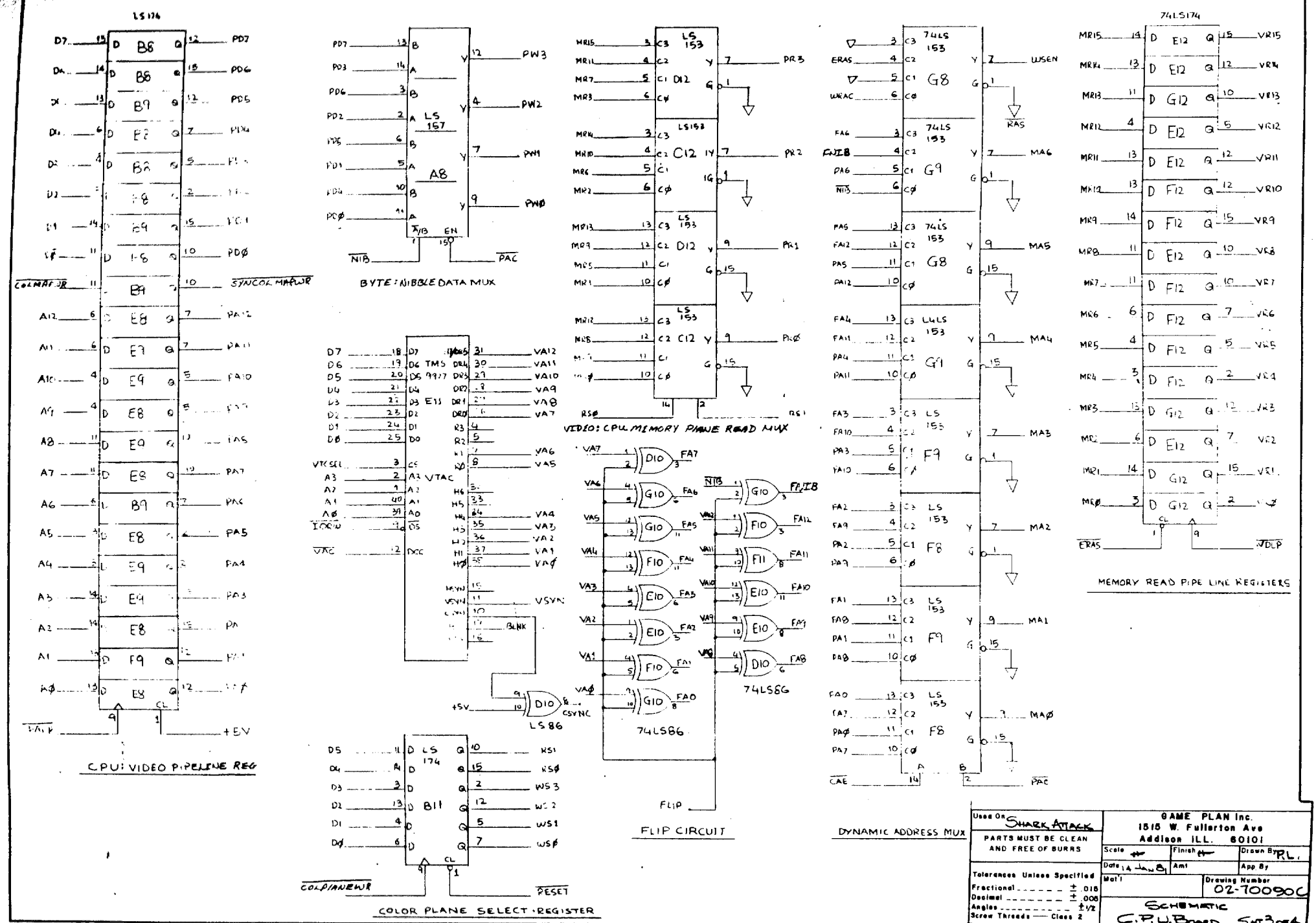

Used On SHARK ATTACK	GAME PLAN Inc. 1515 W. Fullerton Ave Addison ILL. 60101
PARTS MUST BE CLEAN AND FREE OF BURRS	Scale — Finish — Drawn By R.L.
	Date 14 Jan 81 Amt App By
Tolerances Unless Specified: Fractional ± .015; Decimal ± .005; Angles ± 1/2; Screw Threads — Class 2	Mat'l Drawing Number 02-70090C
	SCHEMATIC C.P.U. BOARD SHT 3 OF 4

REVISIONS			
LTR	DESCRIPTION	DATE	APPROVED
1	PRODUCTION CHANGES	11-30-81	

VIDEO RAM

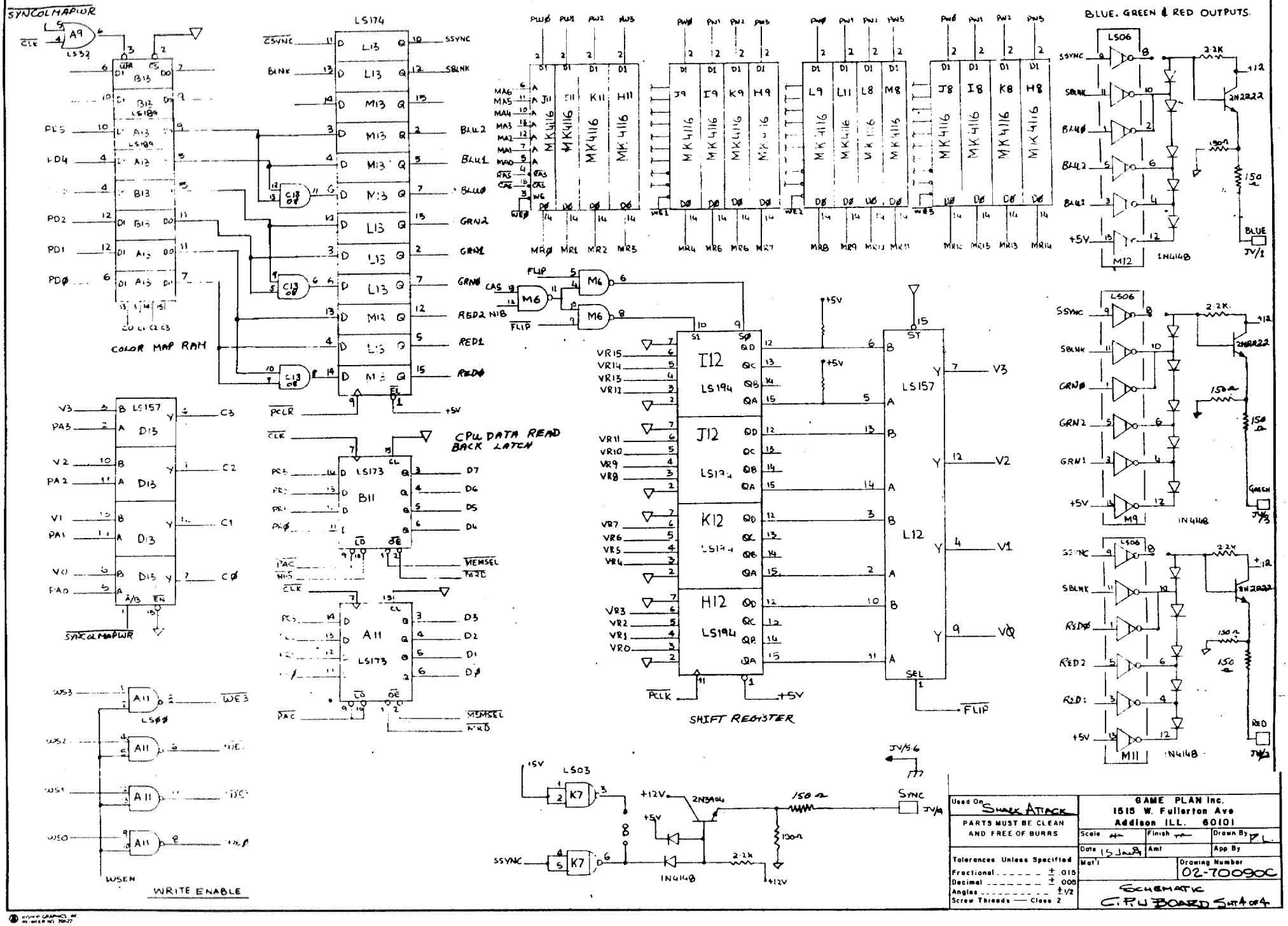

Used On	SHARK ATTACK
PARTS MUST BE CLEAN AND FREE OF BURRS	
Tolerances Unless Specified	Fractional ± .015; Decimal ± .005; Angles ± 1/2; Screw Threads — Class 2

GAME PLAN Inc.
1515 W. Fullerton Ave
Addison ILL. 60101

Scale	Finish	Drawn By
		DL
Date 15 Jan 82	Amt	App By
Mat'l		Drawing Number 02-70090C

SCHEMATIC
C.P.U BOARD SHT 4 OF 4